INSTALLATION GUIDE

AMP RESEARCH®

PowerStep SMART SERIES™ MADE IN USA

APPLICATION	MODEL YR	PART #
Ford F150 Lightning	2022	86252-01A
Ford F150 Powerboost	2021-2022	86252-01A

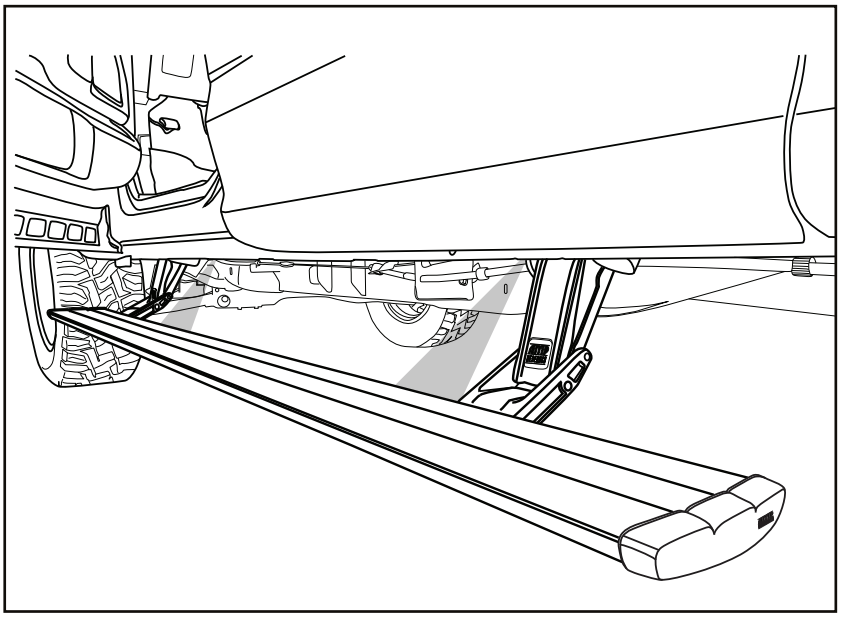

INSTALLATION TIME

2-3 Hours

Professional installation recommended

SKILL LEVEL

1 2 3 4

4= Experienced

TOOLS REQUIRED

- ❑ Safety goggles
- ❑ 10 mm socket
- ❑ 13 mm socket
- ❑ 13 mm end wrench
- ❑ Ratchet wrench and extension
- ❑ Wire stripper
- ❑ 9/32” & 19/64” Drill Bit
- ❑ 3/16” hex key wrench (allen wrench)
- ❑ T-25 Torx Plus
- ❑ Electrical tape
- ❑ Weather proof caulking (silicone sealer)
- ❑ 1/8” Drill bit
- ❑ 19/64” Drill bit
- ❑ Drill gun

WARRANTY

5-Year Limited Warranty

AMP RESEARCH TECH SUPPORT 1-888-983-2204 (Press 2) Monday - Friday, 7:00 AM - 5:00 PM PST

Invented, engineered and manufactured exclusively by AMP Research in the USA. May be covered by one OR MORE of the following patents: 6,641,158; 6,830,257; 6,834,875; 6,938,909; 7,055,839; 7,380,807; 7,413,204; 7,398,985; 7,584,975; 7,566,064; 7,487,986; 8,157,277; 8,408,571; 9,302,626; 9,561,751; 10,053,017; CA2463717 ©2012 AMP Research. All rights reserved. Printed in USA.

INSTALLATION GUIDE
Attaching motor to linkage assembly

The motors must be attached to the linkage assemblies before continuing the installation process.

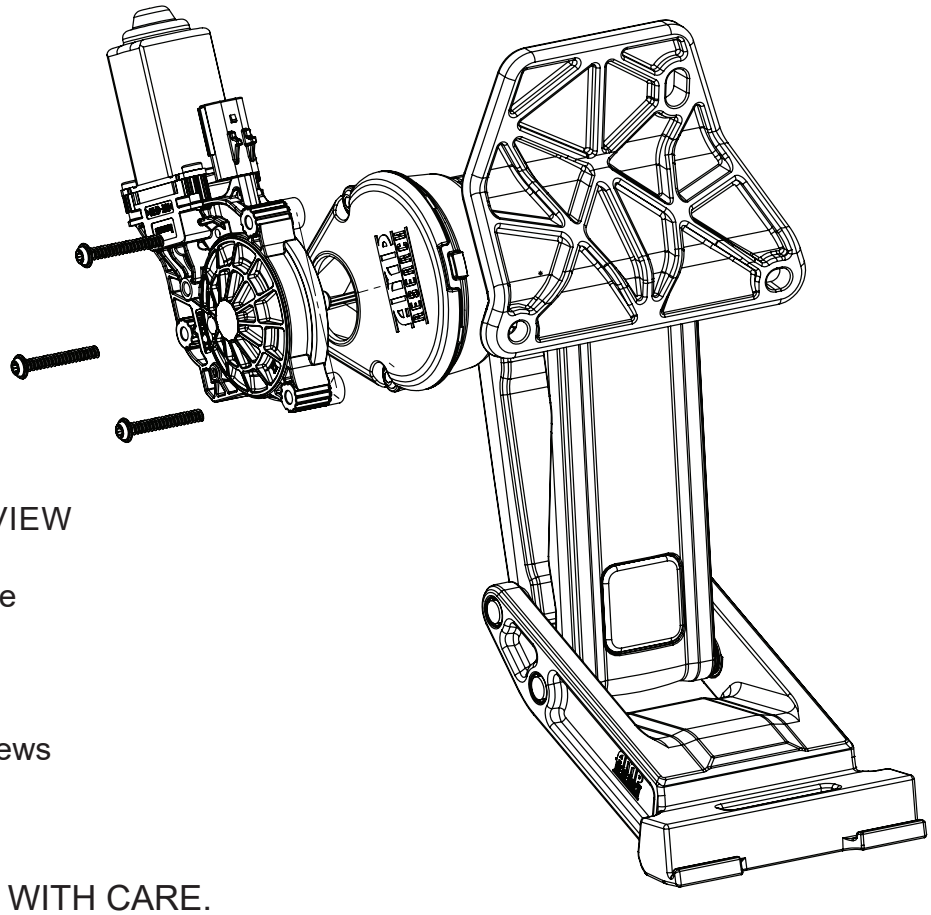

EXPLODED VIEW

- Motor Linkage
- Motor
- Delta PT Screws

CAUTION: HANDLE WITH CARE.

To insure our customers receive all components with full integrity, we pack the motors separate from their linkage assemblies. This requires that the installer position and fasten the motor before continuing with the install. Please follow the instructions below and handle the assembly carefully.

CAUTION: Dropping the assembly or any excessive impact MAY cause damage to the motor.

Instructions:

1. Position the gear cover in place as shown if not already in place.

2. Seat motor into position on the three mounting bosses. This may require an adjustment of the gear by moving the swing arms.

3. After seating into place, fasten the motor with the three motor mount screws with T-25 torx Plus. Tighten screws to 36 in-lbs (4N-m). Do not over torque.

Note: Some Applications require modification.

Application	Cut Length	
Super Crew	85”	(No Modification Required)
Super Cab	75”	(Trim 10”)
Regular Cab	54”	(Trim 31”)

PARTS LIST AND HARDWARE IDENTIFICATION

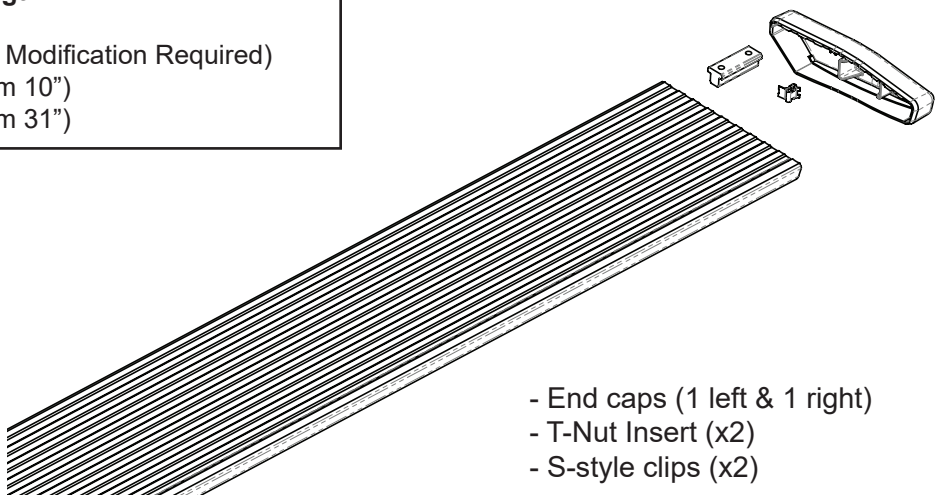

1 x2
Running Board assembly

- End caps (1 left & 1 right)
- T-Nut Insert (x2)
- S-style clips (x2)

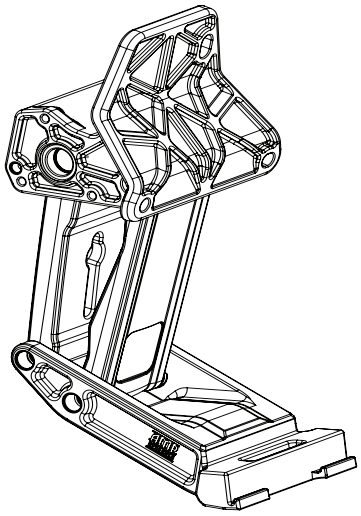

2 x2
Idler linkage assembly
(Front)

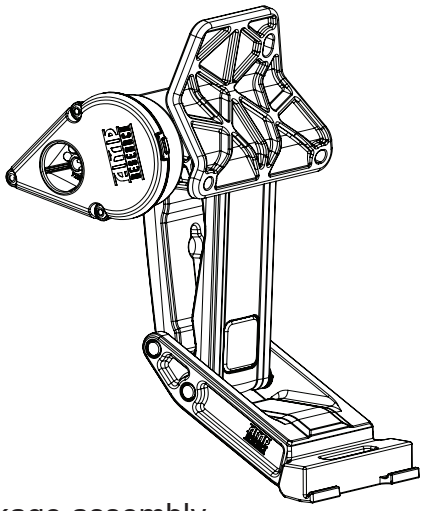

3 x2
Motor linkage assembly
(Rear)

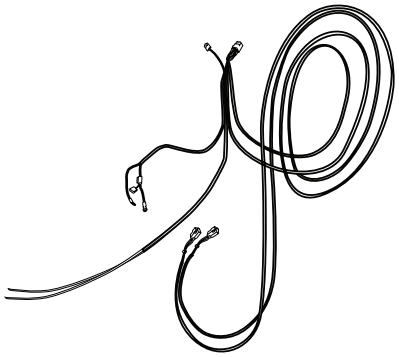

4
Wire harness

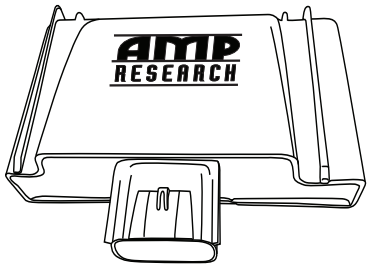

5
Controller SSA

PARTS LIST AND HARDWARE IDENTIFICATION

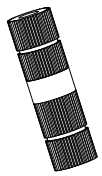

6
Posi-Lock™ (Grey)

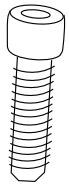

7 x8
Socket cap screw

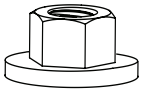

8 x12
Nut with Conical Washer

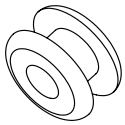

9
Grommet (Only needed on SuperCab)

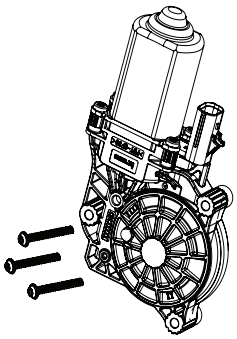

10 x2
Motor kit

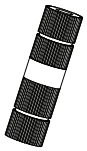

11 x2
Posi-Tap™ (Red)

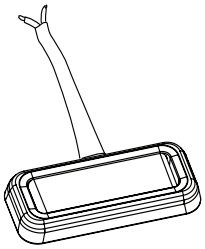

12 x4
LED Light

13 x4
Grommet

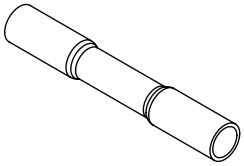

14 x8
Butt Connector

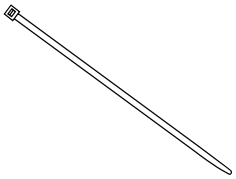

15 x20
Cable Ties 7”

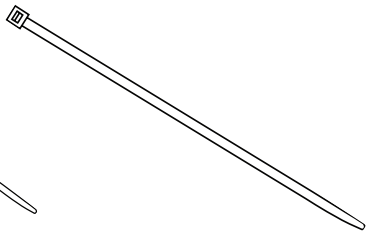

16 x2
Cable Ties 11”

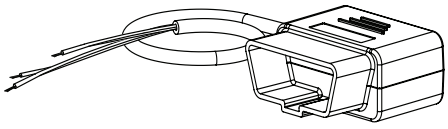

17
ODB II Plug FD21

18 x2
(S) Style Clip (Only used when trimming board lenght)

Locate mounting points; first and last set of studs on the inner sill.
Idler Linkage mounts toward the front of the truck and Motor linkage mounts toward the rear. Driver side shown below.

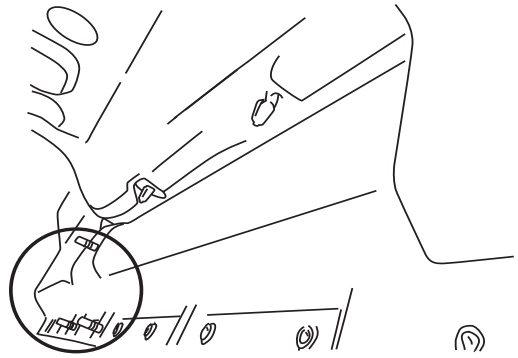

Driver Side Rear Stud Location

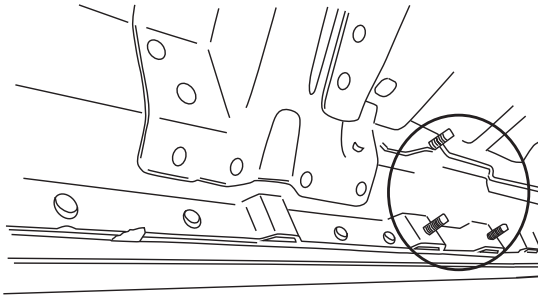

Driver Side Front Stud Location

1

Mount drive and Idler linkage assemblies. Repeat for passenger side. Make sure linkages sit square, fully resting on studs before tightening.

Torque to 16 ft. lbs (22Nm)

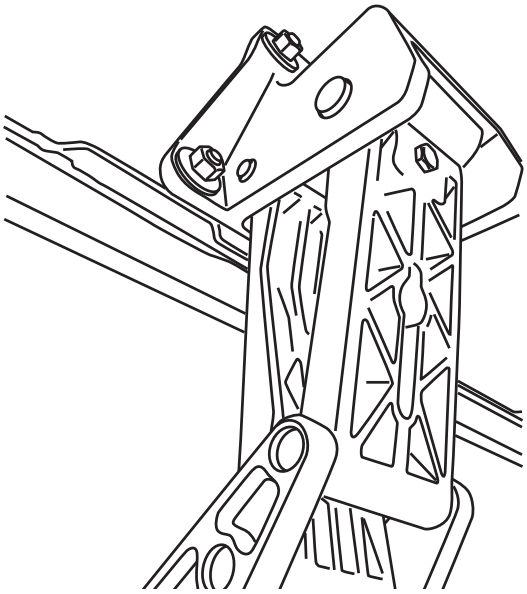

Idler Linkage (Front)

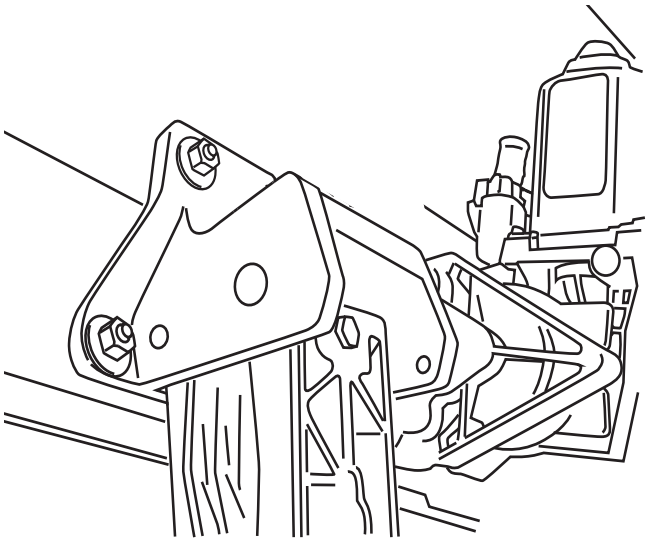

Drive Linkage (Rear)

2

Lighning Models ONLY, follow steps 3 through 5 then go to step 8.

Open Frunk of vehicle and lift battery access cover up and out.

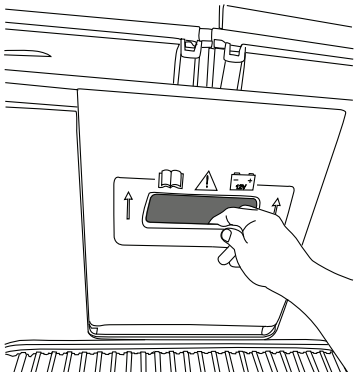

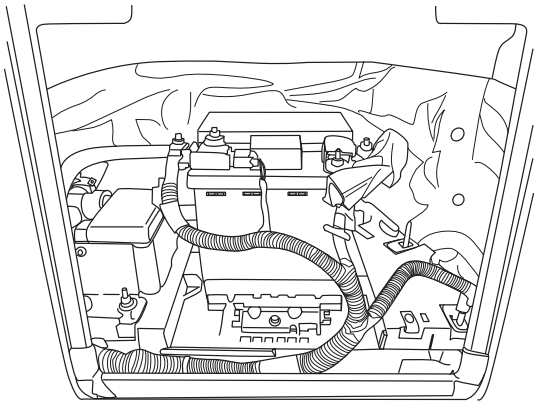

3

Locate battery and connect red power lead to battery. Connect black lead to ground lead on battery. Mount controller to harness located in front of battery using supplied 11” tie wraps(16). Route shorter leg of harness down passenger side wheel well and longer leg of harness down driver side wheel well. Attach harness with supplied 7” Cable tires (15).

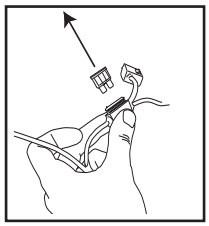

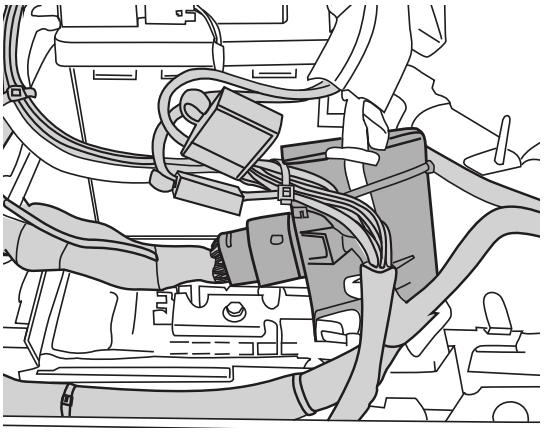

4

Route shorter leg of harness down Passenger -side wheel well and longer leg of harness down along driver side wheel well.
Attach wire harness with supplied 7” cable ties (15).

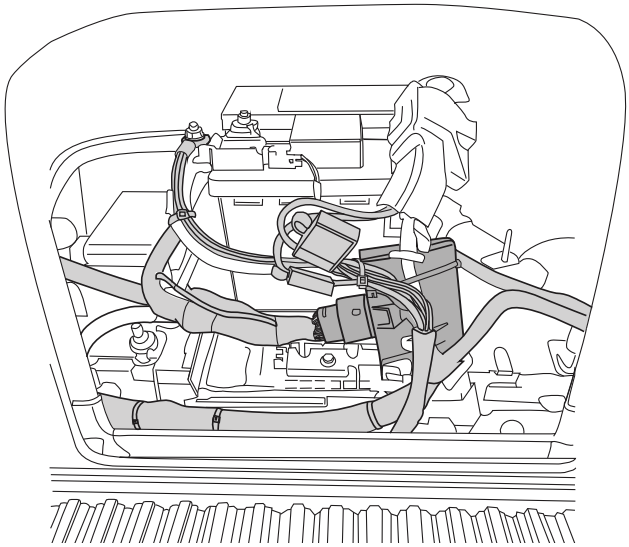

5

Powerboost Models ONLY, follow steps 6 and 7 then proceed to step 8.

Remove fuses from wire harness
Connect red power lead to battery.
Connect black ground lead to 13mm bolt outside of fender wall. Attach wire harness to controller (make sure the connector locking tabs fully engage).
Mount controller with the two 11” tie wraps to factory conduit, just forward of battery.

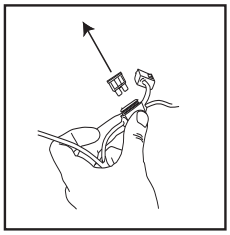

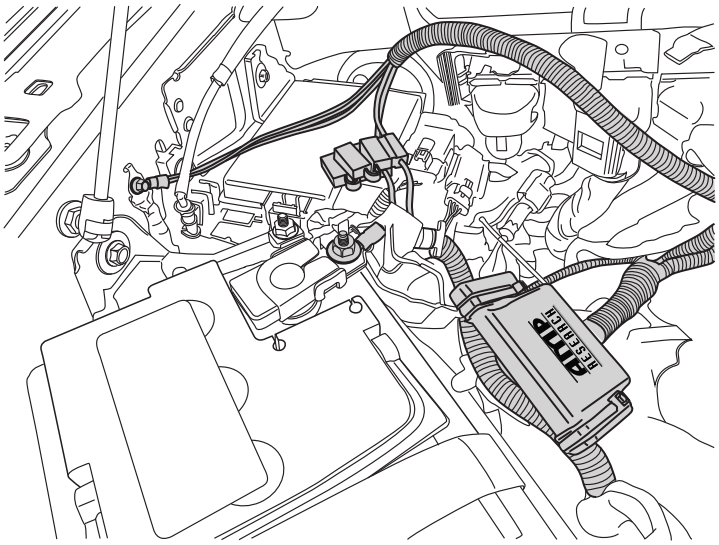

6

Route shorter leg of harness down Passenger -side wheel well and longer leg of harness down along driver side wheel well. Attach wire harness with supplied 7” cable ties (15).

7

Route factory harness underneath vehicle and plug in motors (both sides).

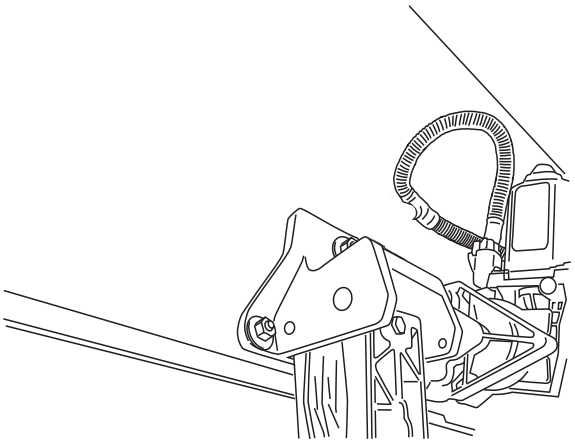

8

Remove driver side front kick panel and door sill plate. Roll back carpet to access hole for passing trigger wires into cab of vehicle.

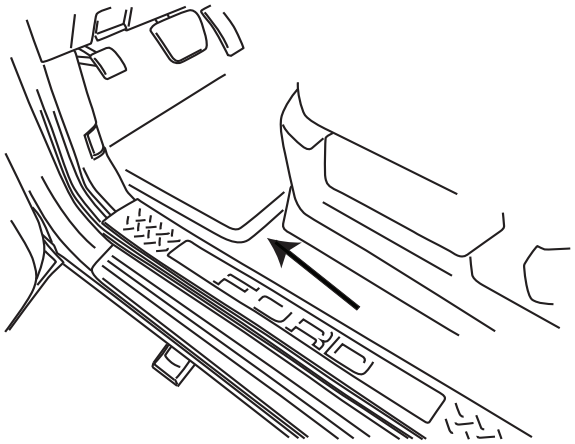

9

On Super crew models, remove grommet in floor panel above front linkage on driver side. Poke small hole into grommet and thread the two trigger wires through and up into the cabin of vehicle. Seal grommet with silicone sealer.

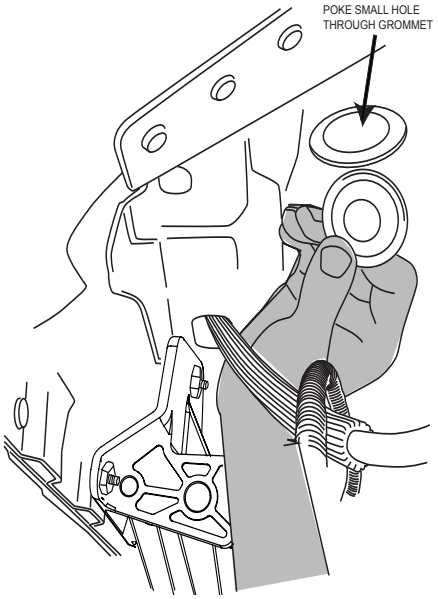

10

On Super Cab models, use a 9/32” drill bit to drill hole through floor and insert grommet (9) that is supplied with kit. Thread the wires through and apply silicone sealant.

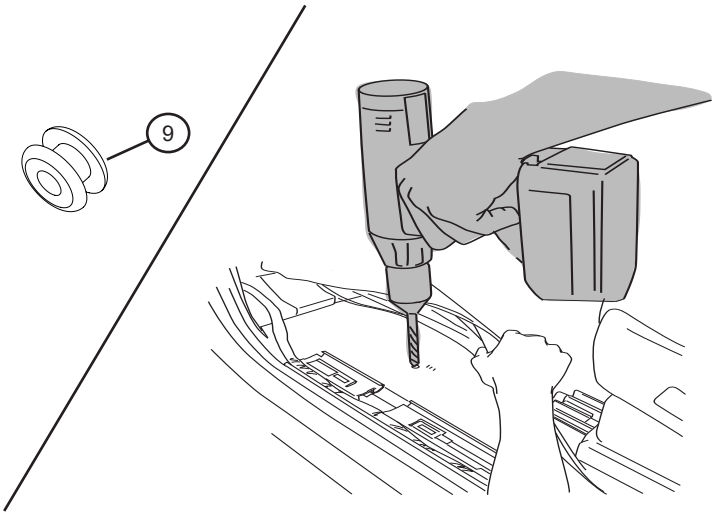

11

Locate black module just above e-brake pedal, and proceed to remove it for easier access. To remove module from bracket, push tab as shown and slide bracket downward.

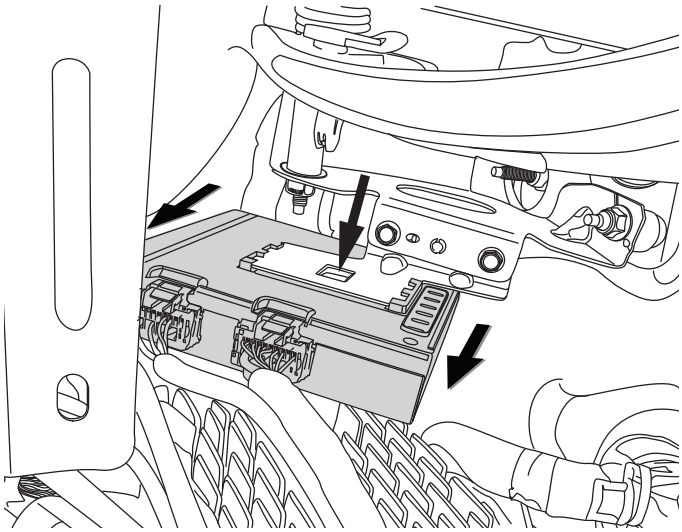

12

Locate the following wires (black connector) and connect the blue and white wires of the Powerstep Connection Module with supplied Posi-Tap™ (18) to the following wire colors listed below.

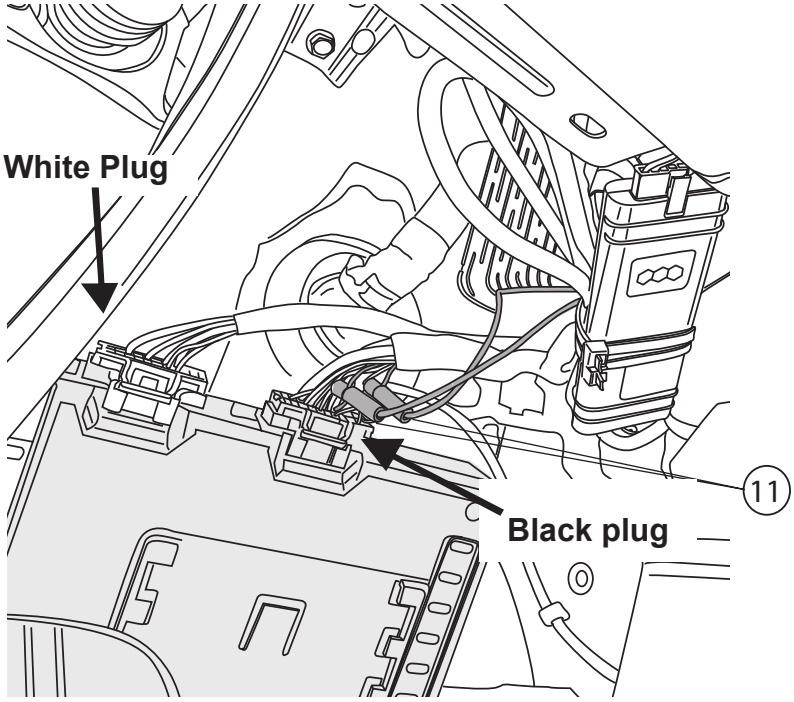

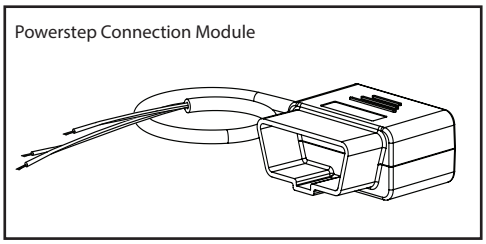

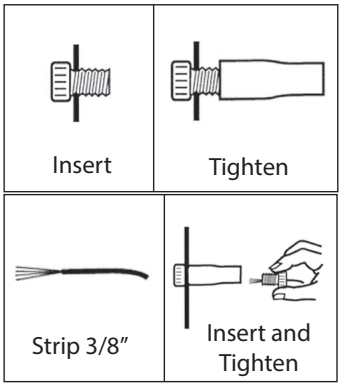

Factory Can Wire	Powerstep Connection Module wire color
Green w/blue stripe	White
White w/green stripe	Blue

After connecting wires, slide module back on to bracket, and ensure locking tab engages.

13

OBD II connection: Use Supplied Posi-Lock™ connector to attach the Powerstep Conection Module to the Harness. Plug in Powerstep Conection module to OBD II port on the vehicle. Secure harness with supplied tie wraps. ***Note: If the OBD II pass thru harness (76404-01A) was purchased see install sheet supplied in packaging. The pass through harness allows for an open port for other accessories. See below for a brief description.***

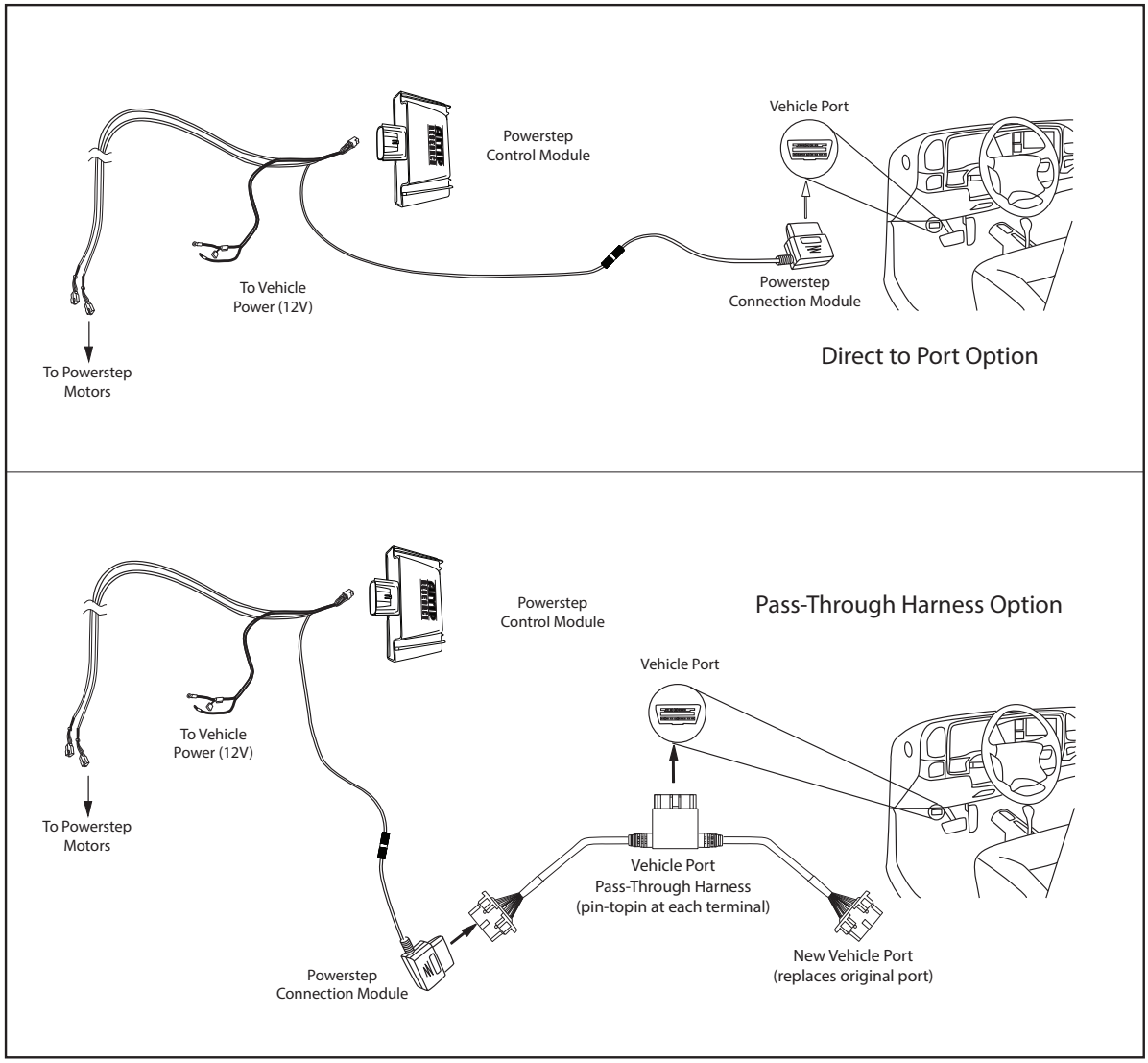

Posi-Lock™ (6) connection.

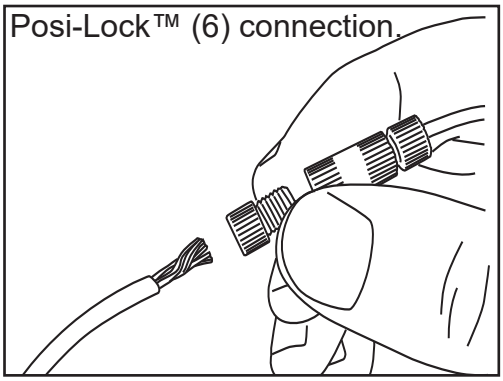

OBD II Module located below steering column.

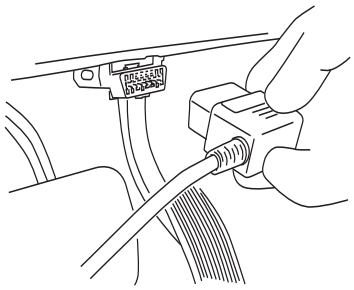

Attach step, sliding the mounting T-nut into position. Torque to 10 ft lbs (13.5 Nm)

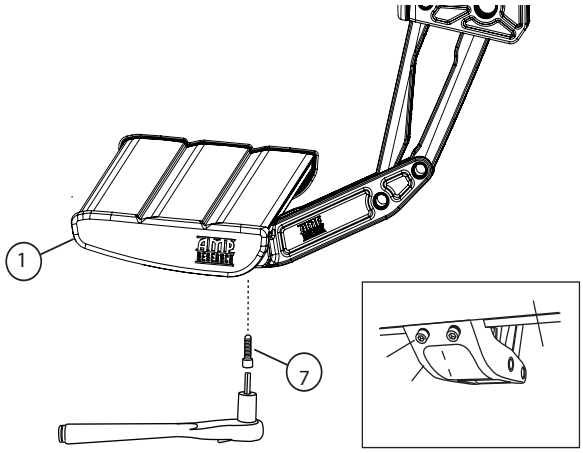

15

On each side of the vehicle measure from the rear linkage to end of the board. Measurement should be approximately 11” as shown below.

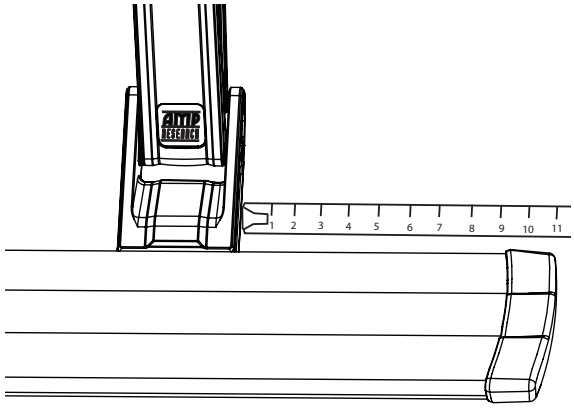

16

On each side of the vehicle use tape to mark the led drill location two sections from studs as shown below. Use tape to indicate. Locations are approximately 23” & 66” from front door edge.

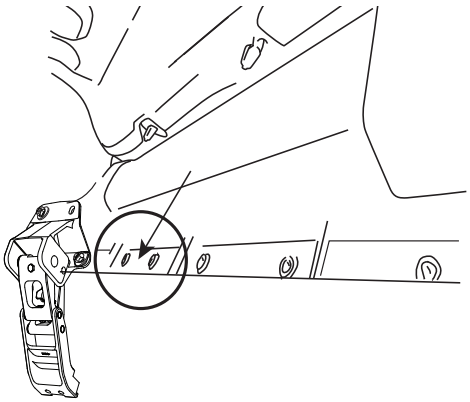

Drive Side Rear Mounted
(In between two rivets just forward of mounting location, as shown above)

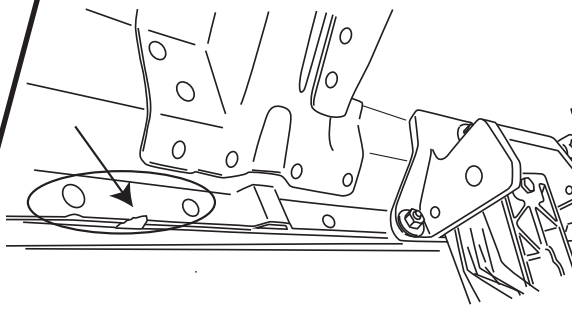

Drive Side Front Mounted
(Just under left edge of body-brace, as shown above)

17

Mark hole location 1/2” midpoint of the rocker with tape. Pre drill using an 1/8” drill bit and final drill to 19/64” thru pinch weld at marked locations. Deburr hole and insert grommet (#13) for LED Wire.

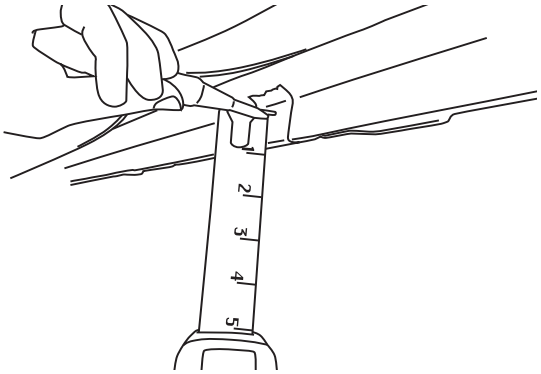

18

Route LED wires though through grommet, clean surface, and stick on to rocker panel as shown below.

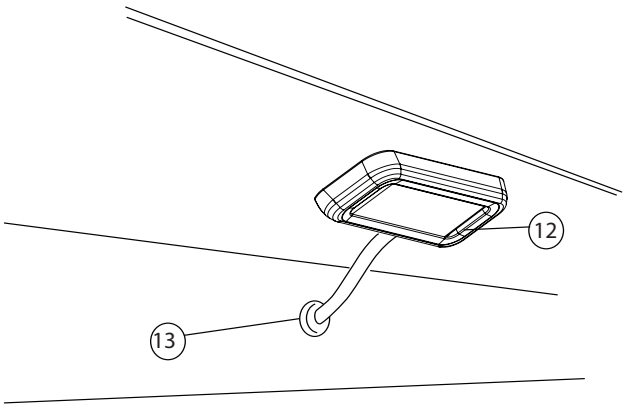

19

Using supplied butt connectors, connect the lamp wires. Red to Red, Black to Black. Heat the shrink tubing on the connecters to seal wires.

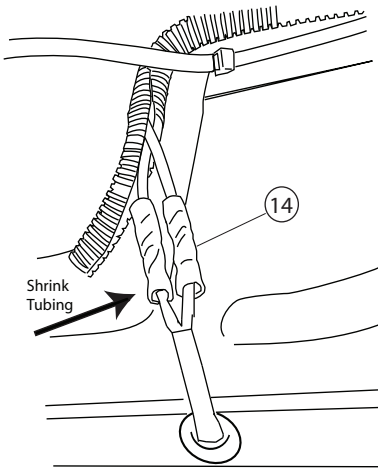

20

Close and wrap with conduit and electrical tape. Secure all loose wires with cable ties with lamp wires pulled upward to avoid any wire snagging.

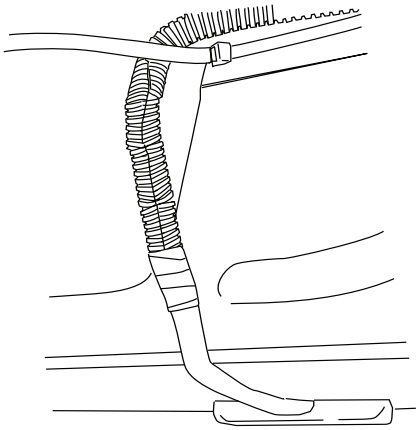

21

Reinstall fuses.

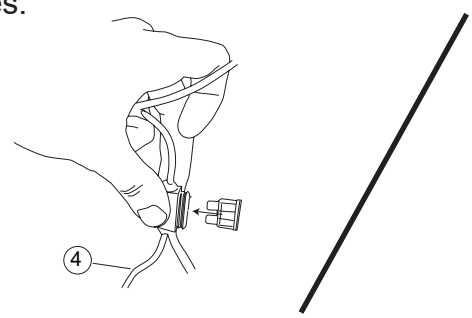

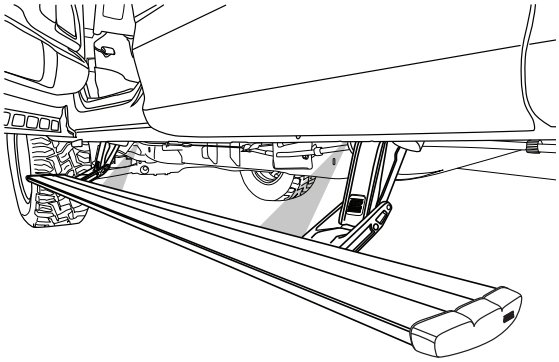

FINAL SYSTEM CHECK
Check that all doors activate the PowerStep and the LED lights work when doors open and close.
NORMAL OPERATION: When the doors open, PowerStep automatically deploys from under the vehicle. When the doors are closed, PowerStep will automatically return to the stowed/retracted position. ***Note that there is a 2-second delay before the PowerStep returns to the stowed/retracted position.***
CORRECT OPERATION OF LIGHTS: All four lamps will illuminate upon opening any door of vehicle. Lamps will stay on until restowing of both Power Steps or until 5 minutes has expired with the doors open. When the lights timeout after 5 minutes, they can be reillumintated by closing and opening any door of vehicle.

22

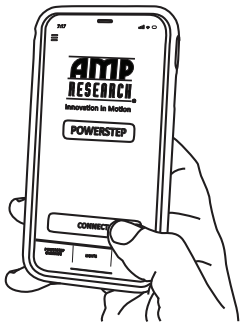

Download our Smart Series App on your Android phone or iPhone by scanning the QR code below and follow the instructions. Or visit your app store and search "AMP Research Powerstep" to download app.

SCAN ME

AMP RESEARCH PowerStep™

AMERICAN DESIGNED, ENGINEERED AND MANUFACTURED.

Thank you for your recent AMP Research Purchase.

REGISTER YOUR PRODUCT TODAY FOR FASTER SERVICE & PRODUCT UPDATES

Please visit:
www.amp-research.com/productregistration
or scan the QR Code

SCAN ME

Product Registration Benefits:

- Ensure we have your purchase receipt and product info in our system which is required for warranty
- Faster and easier access to customer service and tech support in the unlikely event you need warranty or product support
- Registration helps us keep you up to date on product information and offers

To view other Amp Research products that may be offered for your vehicle.
Please visit: www.amp-research.com

AMP RESEARCH PowerStep™

Congratulations on your purchase of the genuine AMP Research PowerStep! Here's what you should know...

POWER-DEPLOYABLE RUNNING BOARDS OPERATION: AMP Research PowerStep running boards automatically move when the doors are opened to assist entering and exiting the vehicle.

Automatic power deploy:
The running boards will extend down and out when the doors are opened.

Automatic power stow:
The running boards will return to the stowed position when the doors are closed. There will be a 2-second delay before the running boards move to the stowed position.

Automatic stop:
If an object is in the way of the moving running board, the running board will automatically stop. To reset, clear any obstruction, then simply open and close the door to resume normal operation.

Manually set in the deployed (OUT) position for access to the roof:
The running boards can be manually set in the deployed position by firmly holding the step down with your foot while at the same time closing the door. To resume normal operation, open and close the door.

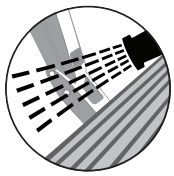

Maintenance: In adverse conditions, debris such as mud, dirt, and salt may become trapped in the running board mechanism, possibly leading to unwanted noise. If this occurs, manually set the running boards to the deployed position and flush the front and rear hinge arms with a high-pressure car wash wand. Avoid spraying the motors directly. After washing, apply silicone spray lubricant to the hinge pivot pins. Do not apply silicone, wax or protectants like Armor All® to the running board stepping surface.

Caution! Keep hands away when the running board is in motion.

5-YEAR LIMITED WARRANTY

AMP RESEARCH warrants this product to be free from defects in material and workmanship for FIVE (5) YEARS FROM DATE OF PURCHASE, provided there has been normal use and proper maintenance. This warranty applies to the original purchaser only. All remedies under this warranty are limited to the repair replacement of the product itself, or the repair or replacement of any component part thereof, found by the factory to be defective within the time period specified. The decision to repair or replace is wholly within the discretion of the manufacturer.

This warranty specifically excludes labor. If you have a warranty claim, first you must call our factory at the number below for instructions. You must retain proof of purchase and submit a copy with any items returned for warranty work. Upon completion of warranty work, if any, we will return the repaired or replaced item or items to you freight prepaid. Damage to our products caused by accidents, fire, vandalism, negligence, misinstallation, misuse, Acts of God, or by defective parts not manufactured by us, is not covered under this warranty.

ANY IMPLIED WARRANTIES OF MERCHANTABILITY AND/OR FITNESS FOR A PARTICULAR PURPOSE CREATED HEREBY ARE LIMITED IN DURATION TO THE SAME DURATION AND SCOPE AS THE EXPRESS WRITTEN WARRANTY. OUR COMPANY SHALL NOT BE LIABLE FOR ANY INCIDENTAL OR CONSEQUENTIAL DAMAGE.

Some states do not allow limitations on how long an implied warranty lasts, or the exclusion or limitation of incidental or consequential damages, so the above limitations or exclusions may not apply to you. This warranty gives you specific legal rights, and you may also have other rights that vary from state to state.

FOR WARRANTY ISSUES WITH THIS PRODUCT PLEASE CALL AMP RESEARCH TECH SUPPORT 1-888-983-2204

WARNING

Be sure to read and precisely follow the provided instructions when installing this product. Failure to do so could place the vehicle occupants in a potentially dangerous situation. After installing or reinstalling, re-check to insure that the product is properly installed.

The material that your product is made from can be recycled. Please also consider recycling the packaging that your product came in.